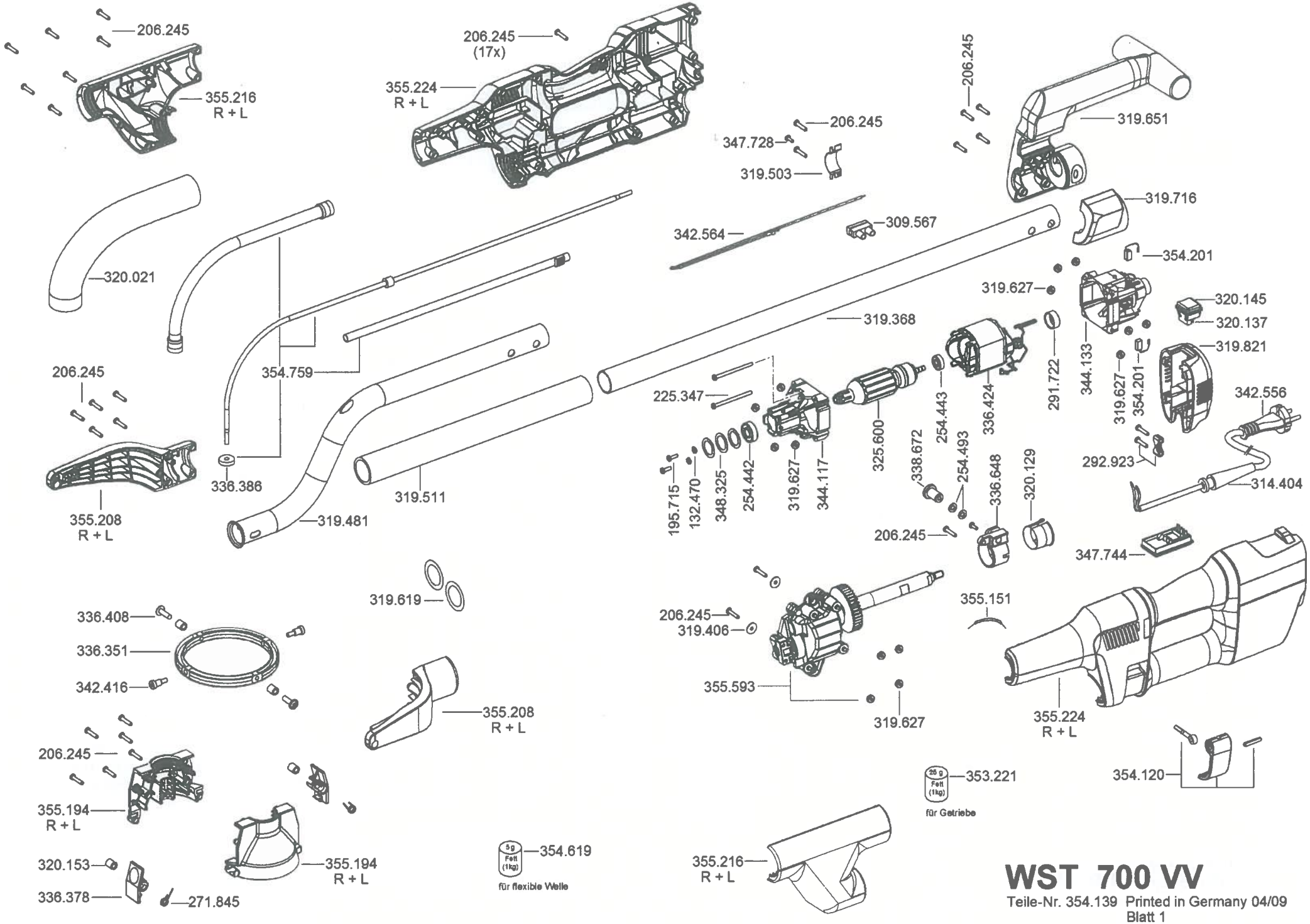

WST 700 VV

Teile-Nr. 354.139 Printed in Germany 04/09
Blatt 1